Product data sheet (PDF)

Ecostat

Ecostat 1001 SL Thermostatic Shower Mixer for exposed fitting, DN15

Description

- Ecostop button (limits flow to 10 l/min.), safety stop at 38°C
- MTC cartridge, non-return valve
- pre-adjustable hot water restriction
- centre distance 150 ± 12mm
- S-shaped connections with noise reduction
- PA-IX 9373/IB
- DVGW NW-6509CM0449

Surfaces	Art. no.
chrome	13261000

Product image
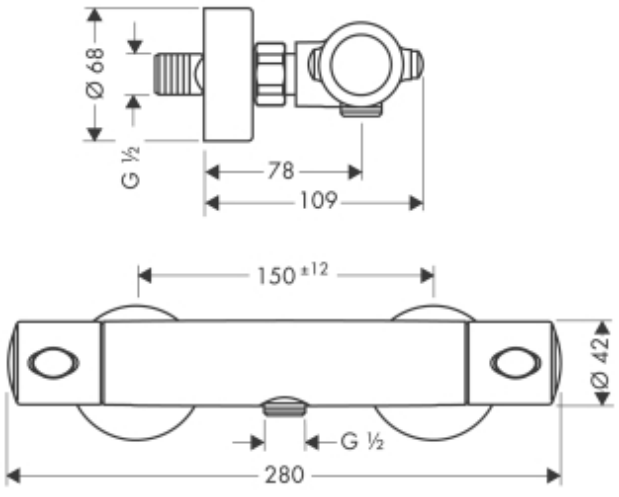
Scale drawing